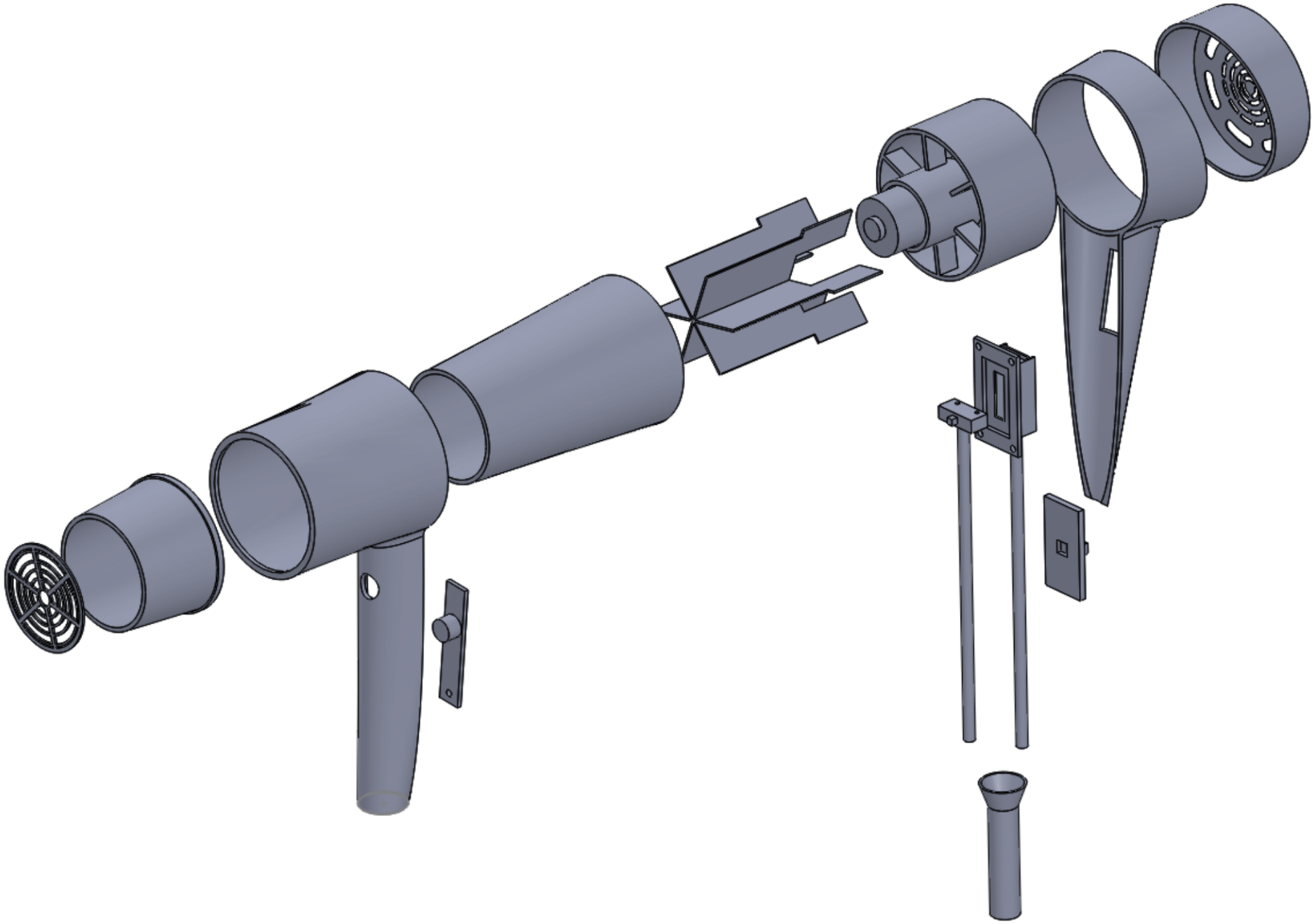

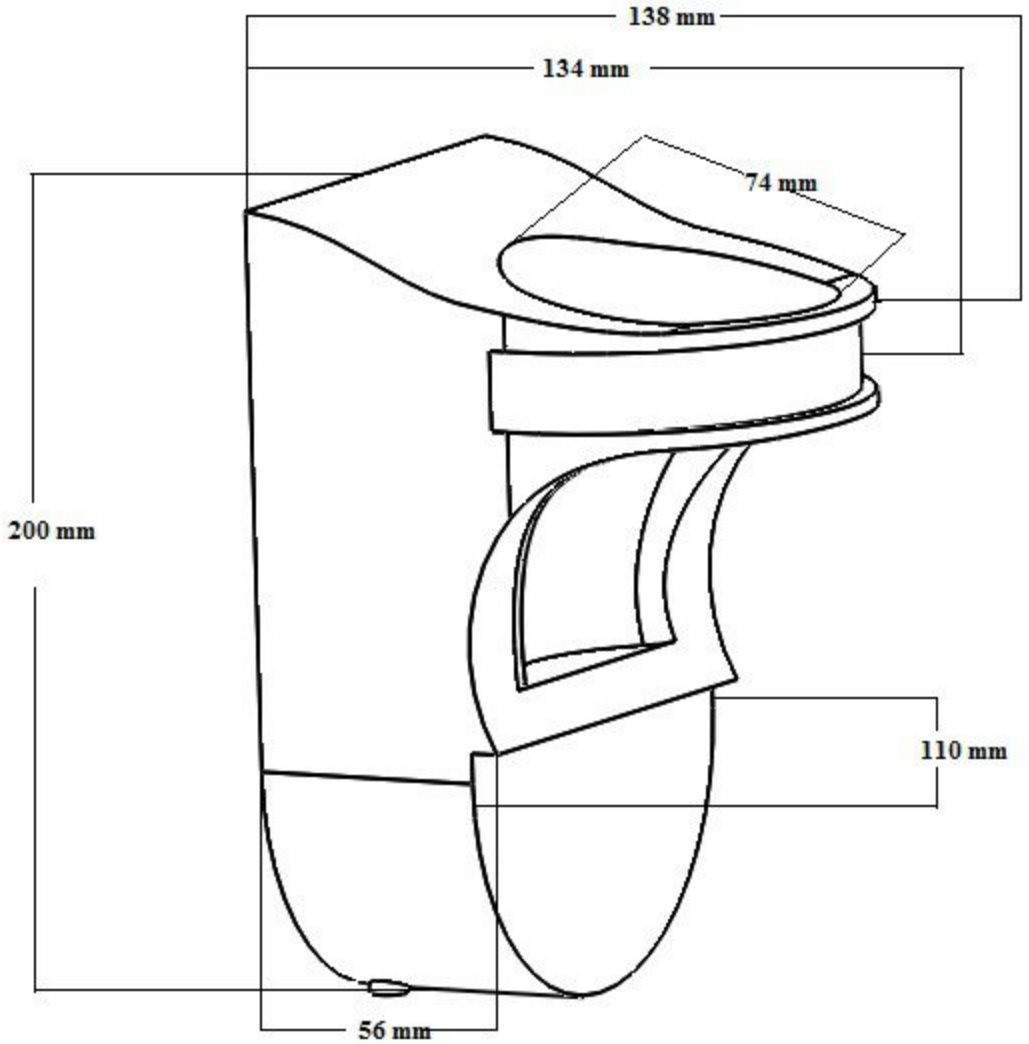
138 mm
134 mm
74 mm
200 mm
110 mm
56 mm

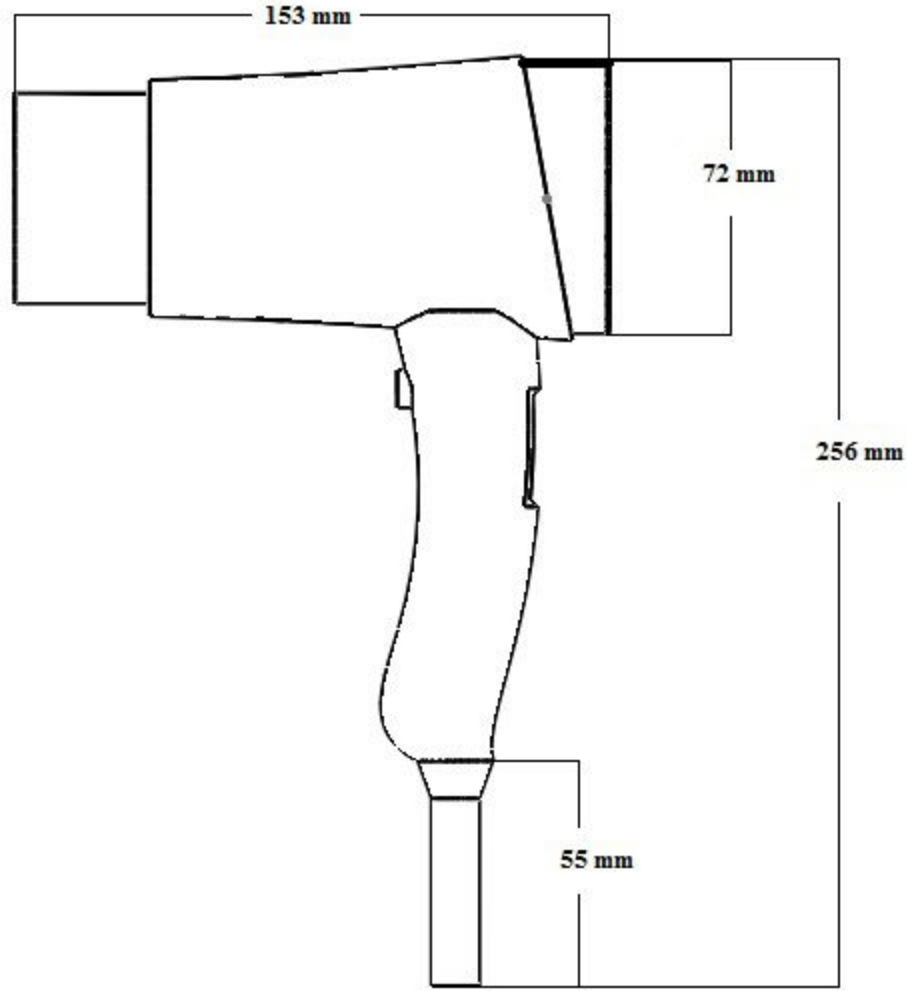
153 mm
72 mm
256 mm
55 mm